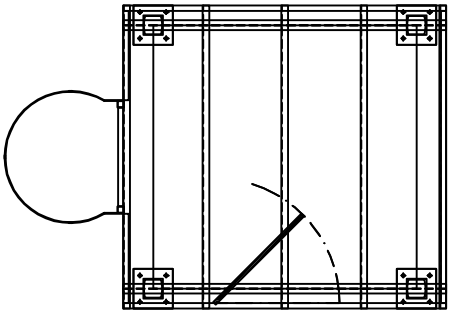

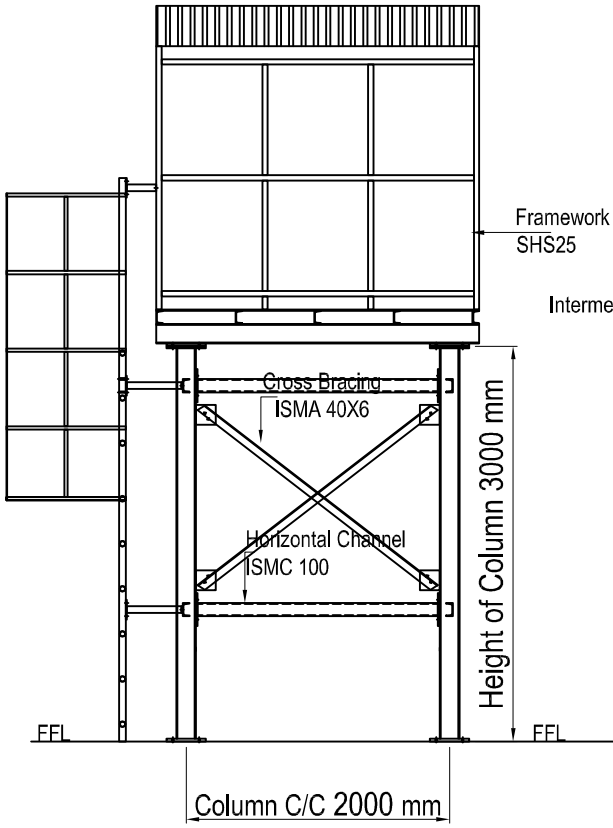

SIDE VIEW

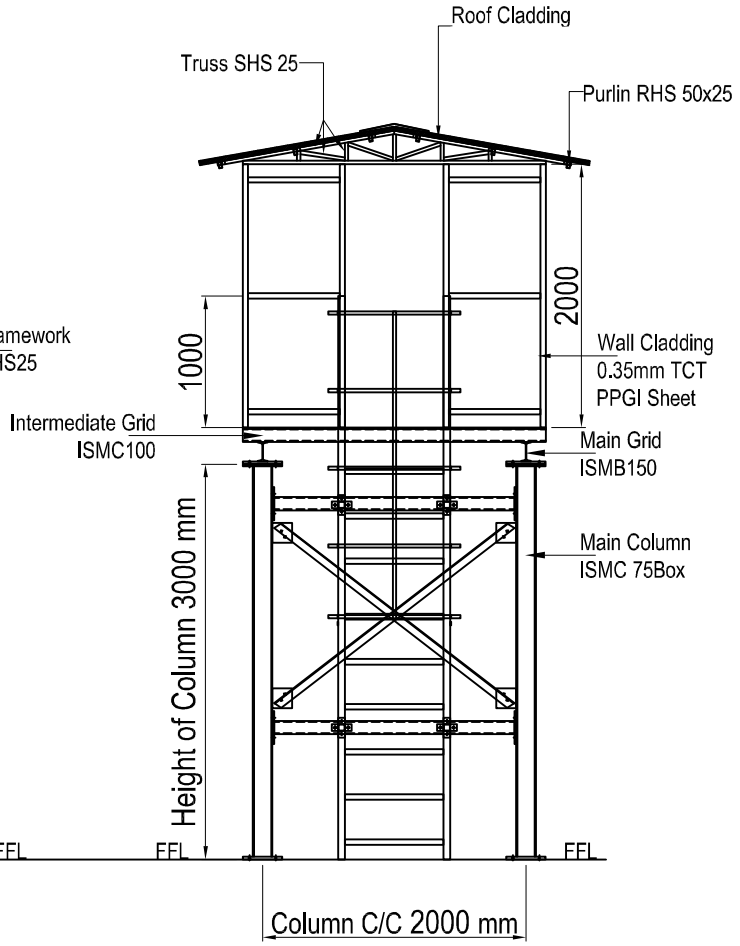

FRONT SIDE VIEW

Note : All Dimensions are in mm

Bharat Heavy Electicals Limited				TITLE :- PLAN OF WATCH TOWER					Sheet :- 01
SIZE :	2 Length	2 Width	3 mtr. Height		NAME	SIGN.	DATE	Scale 1 : 1	PROJECTION
				DSGN	BLK		10.06.16		
DWG NO : PEPL - JUNE 16 - BHEL - P 001				DRWN	RSR		10.06.16		
PROJECT : WATCH TOWER				CHKD	CRJ		10.06.16	Sh. Size A4	REVISION : 0
				APPD					

FIRST ANGLE PROJECTION

ALL DIMENSIONS ARE IN MM

DRAWING NO.

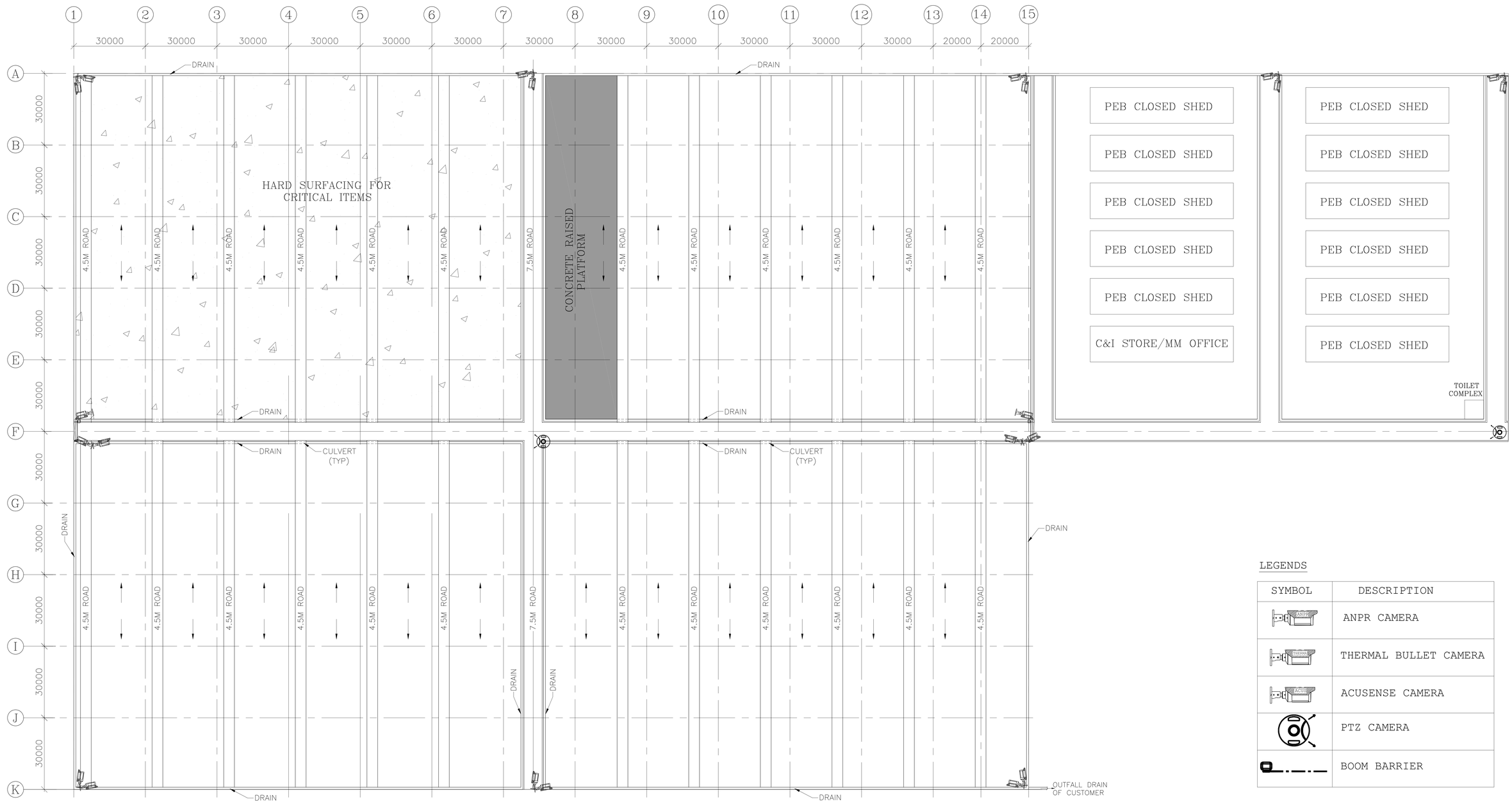

LEGENDS

SYMBOL	DESCRIPTION
ANPR	ANPR CAMERA
THERMAL	THERMAL BULLET CAMERA
ACUSENSE	ACUSENSE CAMERA
	PTZ CAMERA
	BOOM BARRIER

TYPICAL LAYOUT PLAN OF OPEN STORE YARD & CLOSED SHED

COPYRIGHT AND CONFIDENTIAL
The information on this document is the property of BHARAT HEAVY ELECTRICALS LIMITED
is must not be used directly or indirectly in any way detrimental to the interest of the company.

REV	DESCRIPTION	DESN	DRN	CHD	APPD

CONSULTANT:

CLIENT:

PROJECT: STANDARDIZATION OF PROJECT INFRASTRUCTURE FACILITIES

CONTRACTOR
BHARAT HEAVY ELECTRICALS LTD
POWER SECTOR

TITLE: TYPICAL LAYOUT PLAN OF OPEN STORE YARD & CLOSED SHED

SCALE

DRAWING NO.

RELEASED FOR: ☐ PRELIMINARY ☐ TENDER ☐ INFORMATION ☐ APPROVAL ☐ CONSTRUCTION

	NAME	DATE
DRN		
DESN		
CHD		
APPD		

SHEET OF REV.

PROJECTION

FORMAT SIZE A0

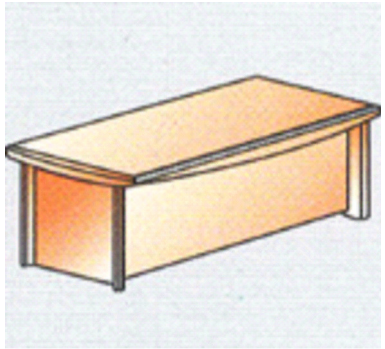

Desk-W180xD90xH75

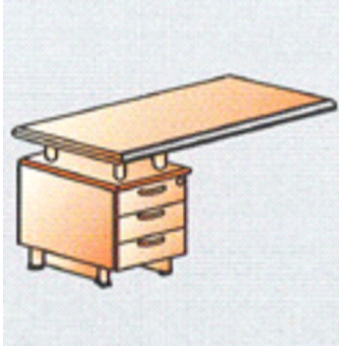

Fixed side return Desk
W120xD60xH72

Mobile pedestal
W120xD60xH72

MAESTRO TYPE TABLE FOR SITE-INCHARGE

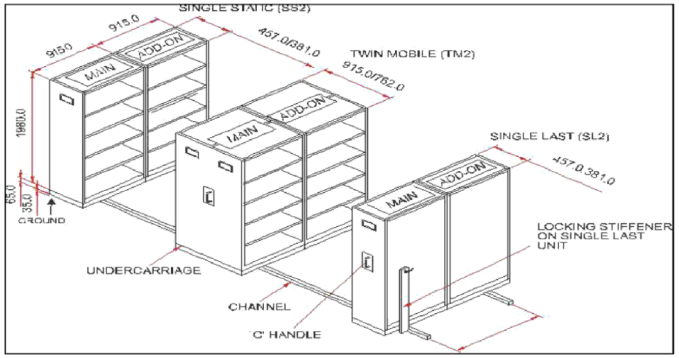

PULL - PUSH TYPE OPTIMIZER

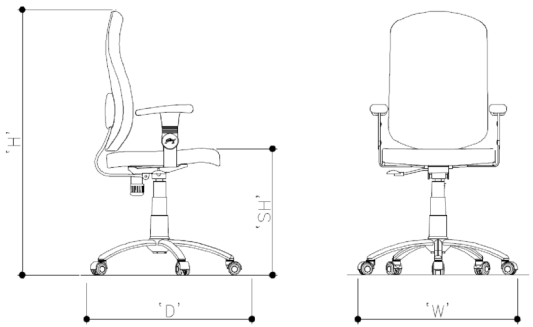

Chair for Senior executives
W-70cm,
D-70cm,
H-102 to 115cm,
SH-44 to 56.5cm
Tolerance- ±0.5cm

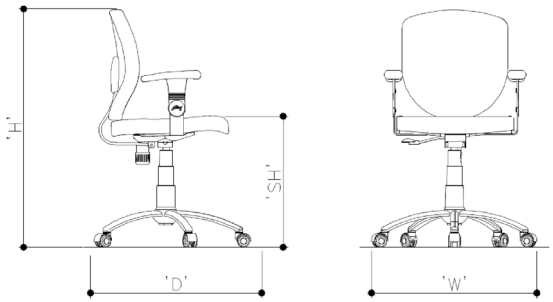

Chair for Executives & Conf. hall
W-70cm,
D-70cm,
H-90 to 102.5cm,
SH-44 to 56.5cm
Tolerance- ±0.5cm

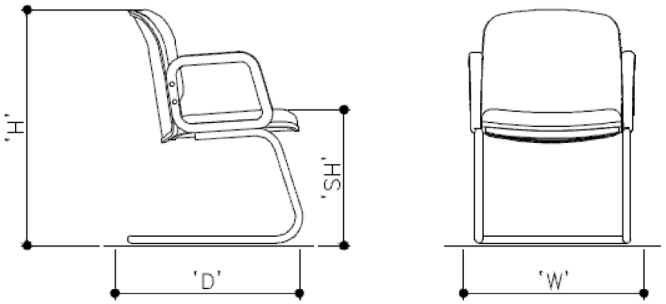

Chair for visitors:
W-55cm,
D-61cm,
H-80.5 cm,
SH-44 cm,
Tolerance- ±0.5cm

NOTE:–

ALL DIMENSIONS SHOWN ARE ASSUMED AND SHOULD BE VERIFIED ACCORDINGLY

PRINT SCALE IN METRE
0 2 4 6 8 10 20 30 40 50

BHARAT HEAVY ELECTRICALS LTD
POWER SECTOR – SOUTHERN REGION
CHENNAI
PSSR

TITLE :
FURNITURE DRAWINGS

DEPT.	CIVIL	STRUCTURAL	BHEL DRAWING NO.
SIGN			BHEL:PSSR:PMX:OFC:008
DATE	26–11–2010		SHEET 1 OF 1 REV. 00

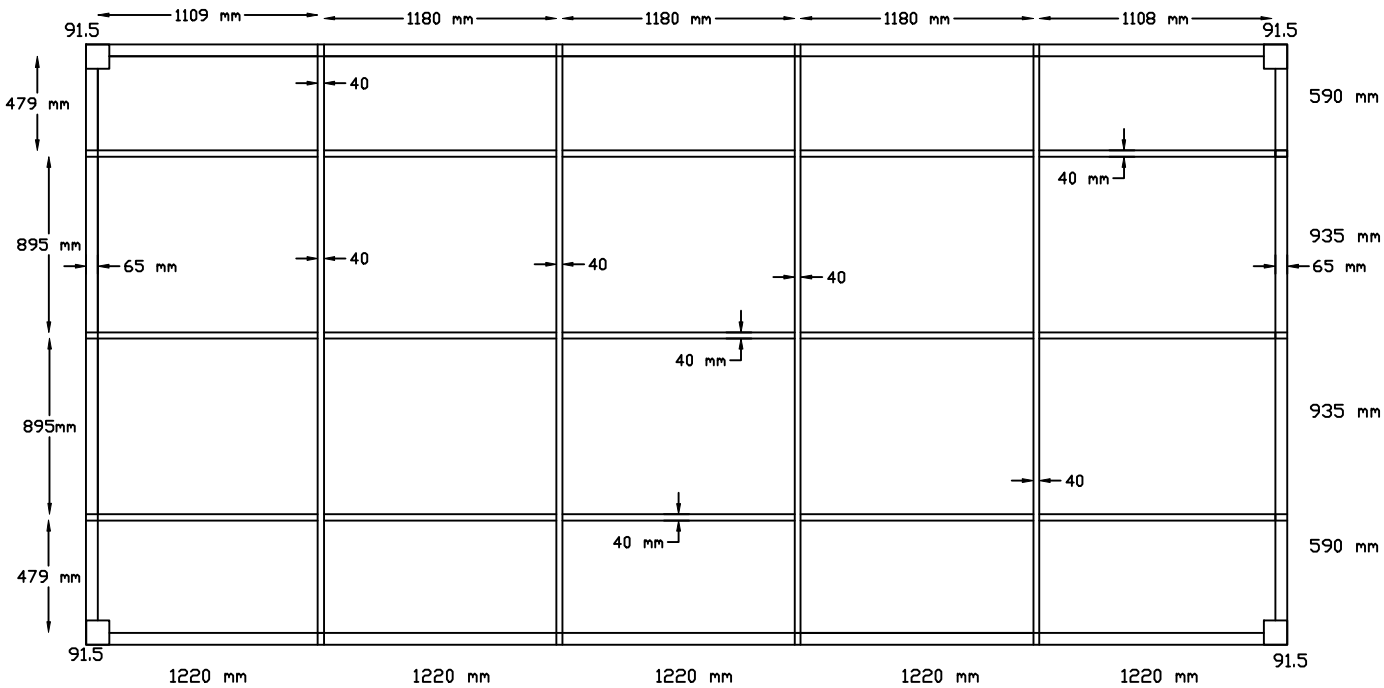

Plan of MS Base frame (size 20' x 10' x 8.5')

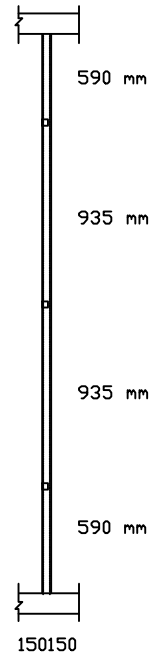

SIDE VIEW

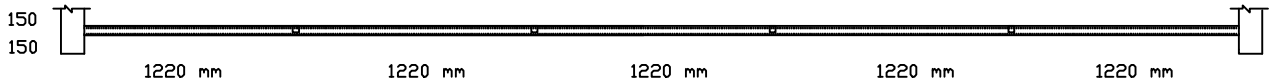

ELEVATION

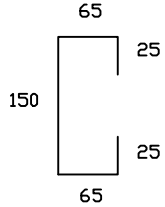

C SECTION DETAILS

Material of MS Base frame (150mm x 65mm x 2.5mm thick) & RHS (Rolled Hollow Section) --- 80mm x 40mmx 2.5mm thick

Drawing Title - MS Base frame Size - 20' x 10' x 8.5'

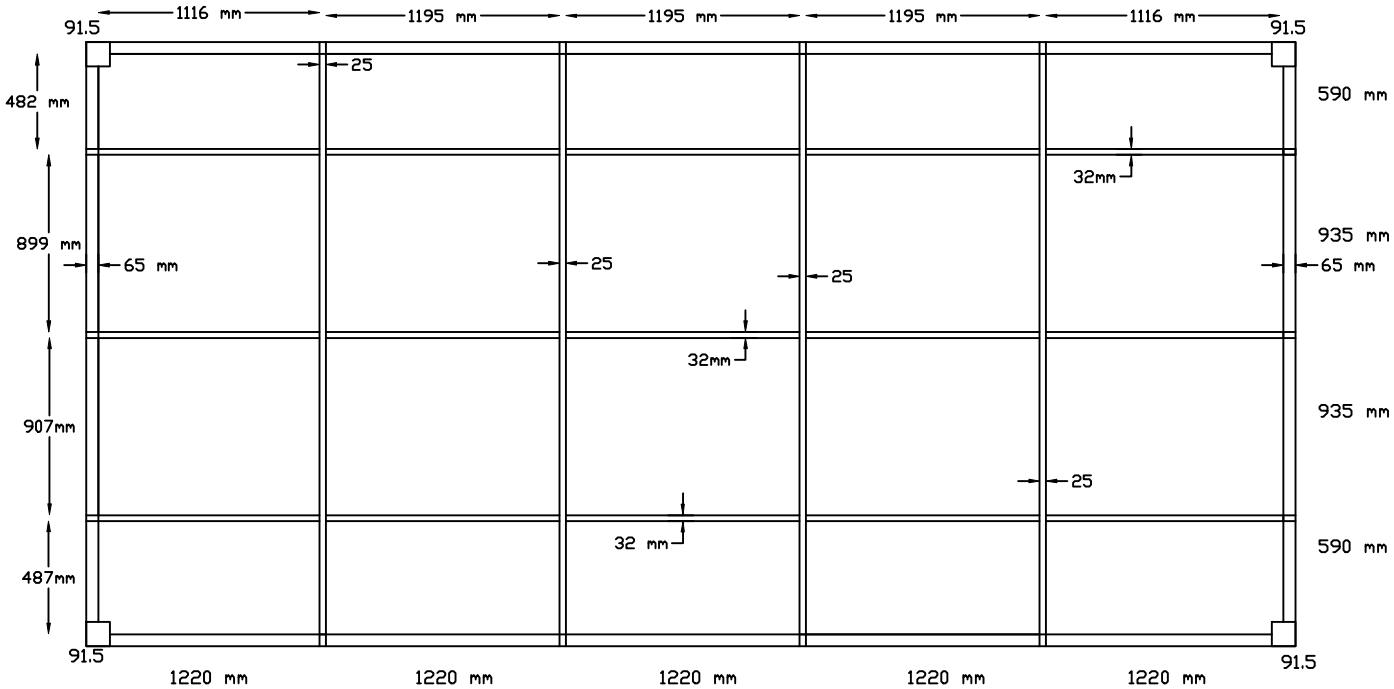

Plan of MS Top frame (size 20' x 10' x 8.5')

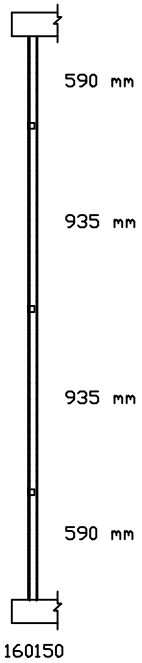

SIDE VIEW

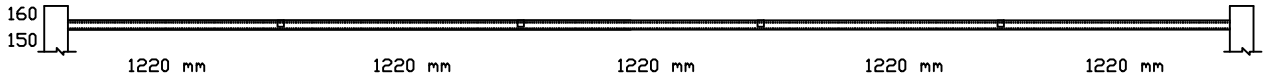

ELEVATION

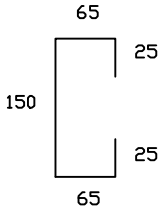

C SECTION DETAILS

Material of MS Top frame (150mm x 65mm x 2.5mm thick) & RHS (Rolled Hollow Section) --- 50mm x 25mmx 2.5mm thick
SHS (Square Hollow section) --- 32mm x 32mm x 2.0mm thick

Drawing Title - MS Top frame Size - 20' x 10' x 8.5'

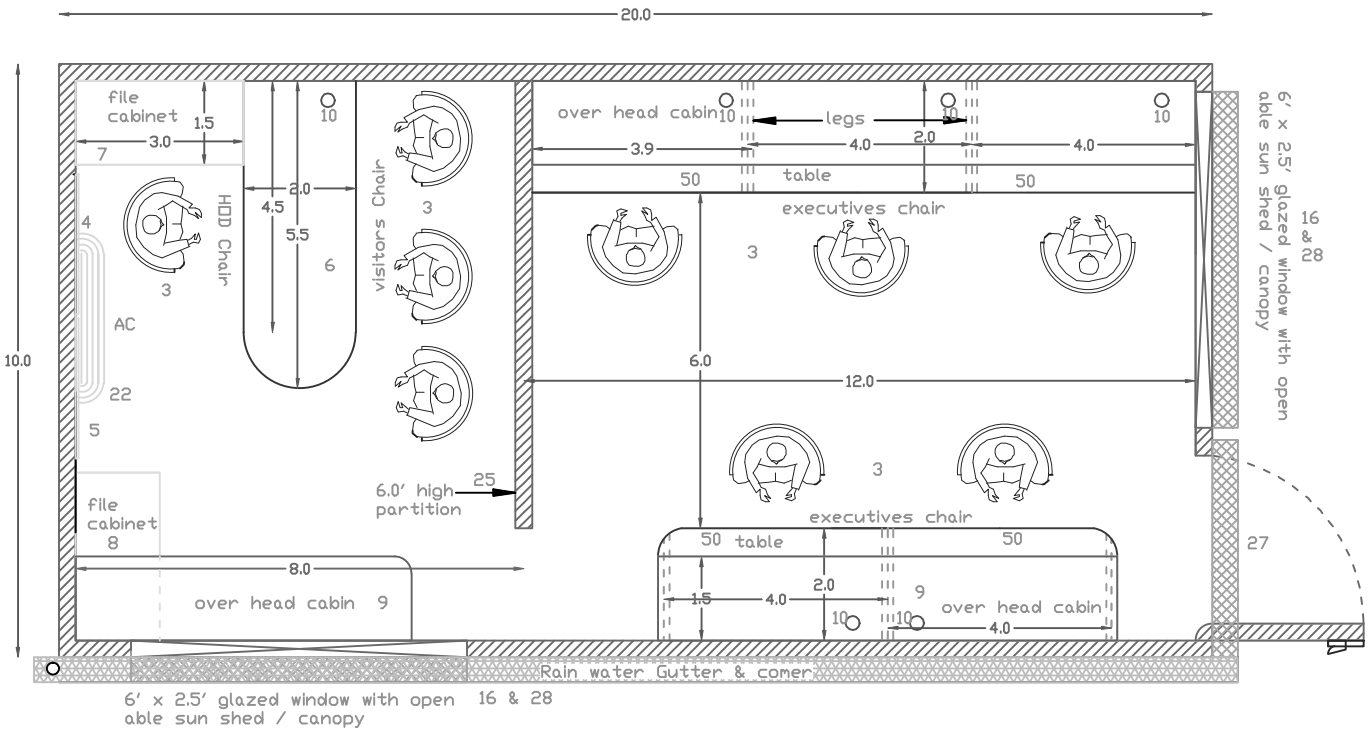

EXECUTIVE INCHARGE / HOD - 20' X 10 ' X 8.0 ' - B TYPE BUNK HOUSE.

Code No	Materials Lists / Specifications	Qty
3	EX. chair serena model 19002 A Godreg make	6
	Visitor chair regency model PCH 7003D Godreg make	3
4	White board Size:750x1000mm	1
6	HOD Table Size:1676x600x750mm ht.	1
7	File cabinet Size:914x450x750mm ht.	1
8	File cabinet Size:914x450x1500mm ht.	1
9	Over Head Cabinet Size:450x600mm .	3
10	Opening for cable	6
16	PVC Sliding window Size:1829x900mm	2
22	Split A.C.	1
25	Half Partition 6' Height	1
27	Door Size:900x1970mm	1
28	Canopy (Foldable) at door / Window size as per Drawing	
50	Running Table of Size : 2 ' width x length as per drawing	
5	Perforated board Size:750x1000mm	1

Note :
1) All dimensions in the Drawing are in Feet & Inches unless otherwise mentioned.
2) Clear Height between finished floor level to bottom of ceiling is 8.00'.
3) Condenser unit for split AC shall be located outside of Bunk house .
4) Position of cable opening as per the switch board location.

Title: Executive in charge / HOD cabin

Type : E

Size : 20' x 10 '

Clint : BHEL - PSWR

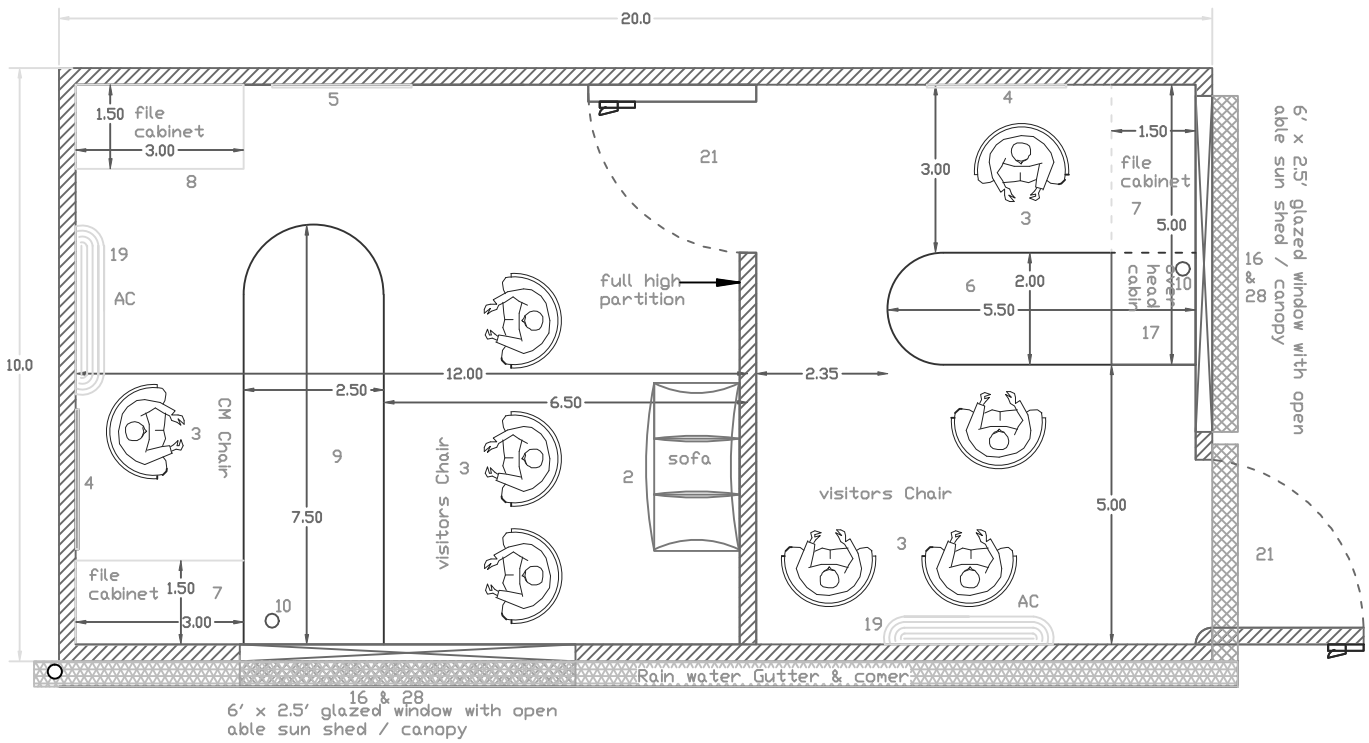

CONSTRUCTION MANAGER CMC CABIN - 20' X 10' - A TYPE BUNK HOUSE.

Code No.	Materials Lists / Specifications	Qty
2	Sofa petal series F3XX 3seater Godreg make Model No.	1
3	CM chair regency model ECH 7001D Godreg make Model No.	1
	PS chair serena model 19002 A Godreg make Model No.	1
	Visitor chair regency model PCH 7003D Godreg make Model No.	6
4	White board Size:750x1000mm	2
5	Perforated board Size:750x1000mm	1
6	PS Table Size:1829x600x750mm ht.	1
7	File cabinet Size:914x450x750mm ht.	2
8	File cabinet Size:914x450x1500mm ht.	1
9	CM Table Size:2286x750x750mm ht.	1
16	PVC Sliding Glazed window Size:1829x750mm	2
18	Over Head Cabinate with 2 track sliding shutter size: 450x450mm	1
19	Split A.C.	2
20	Full Partition (up to ceiling)	1
21	Door Size:900x1970mm	2
23	Opening for cable	2
28	Canopy (Foldable) at door / Window size as per Drawing	
10	Opening for cable	2

Note :
1) All dimensions in the Drawing are in Feet & Inches unless otherwise mentioned.
2) Clear Height between finished floor level to bottom of ceiling is 8.00'.
3) Condenser unit for split AC shall be located outside of Bunk house .
4) Position of cable opening as per the switch board location.

Title: Construction Manager cabin

Type : A

Size : 20' x 10 '

Clint : BHEL - PSWR

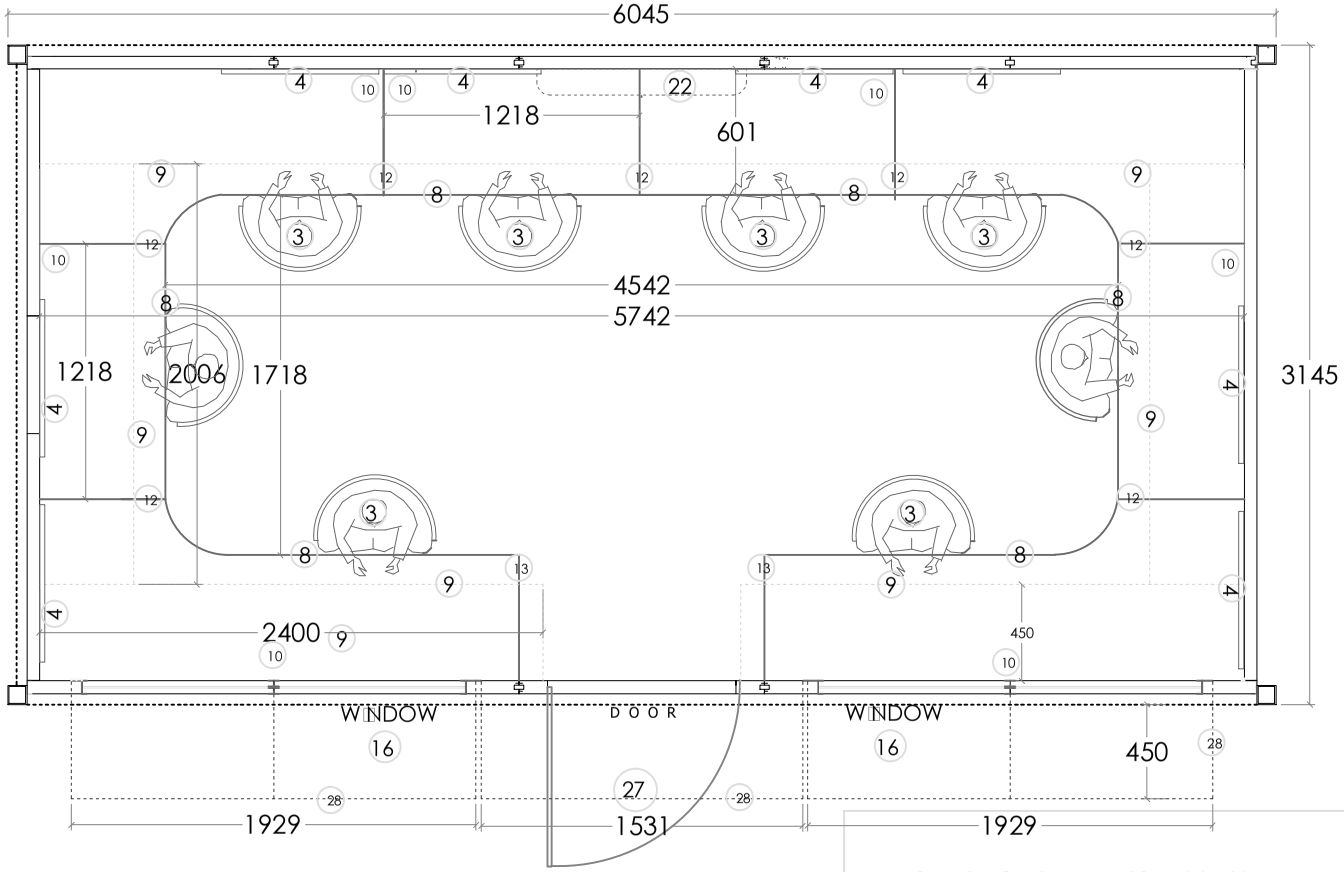

3	Visitor/Staff chair regency model PCH 7003D Godre□make.	8
4	White board Size:750x1000mm	8
8	Running Table Size:as per Drawing.	2
9	Over Head Cabinate Size:As per Drawing.	
10	Opening for cable	8
12	Table partition wall 450mm height from top table surface	7
13	Partition wall up to bottom of Over head cabinate	2
16	PVC Sliding Glazed window Size:1829x750mm	2
22	Split A.C.	1
27	Door Size:900x1970mm	1
28	Canopy (Foldable) at door / Window size as per Drawing	

Note:
1) All Notes shall be followed as per other drawings

Field Cabin /Staff **Size: 20'x10'----** **Type: C**

BHEL PSWR

FIRST ANGLE PROJECTION

ALL DIMENSIONS ARE IN MM

DRAWING NO.

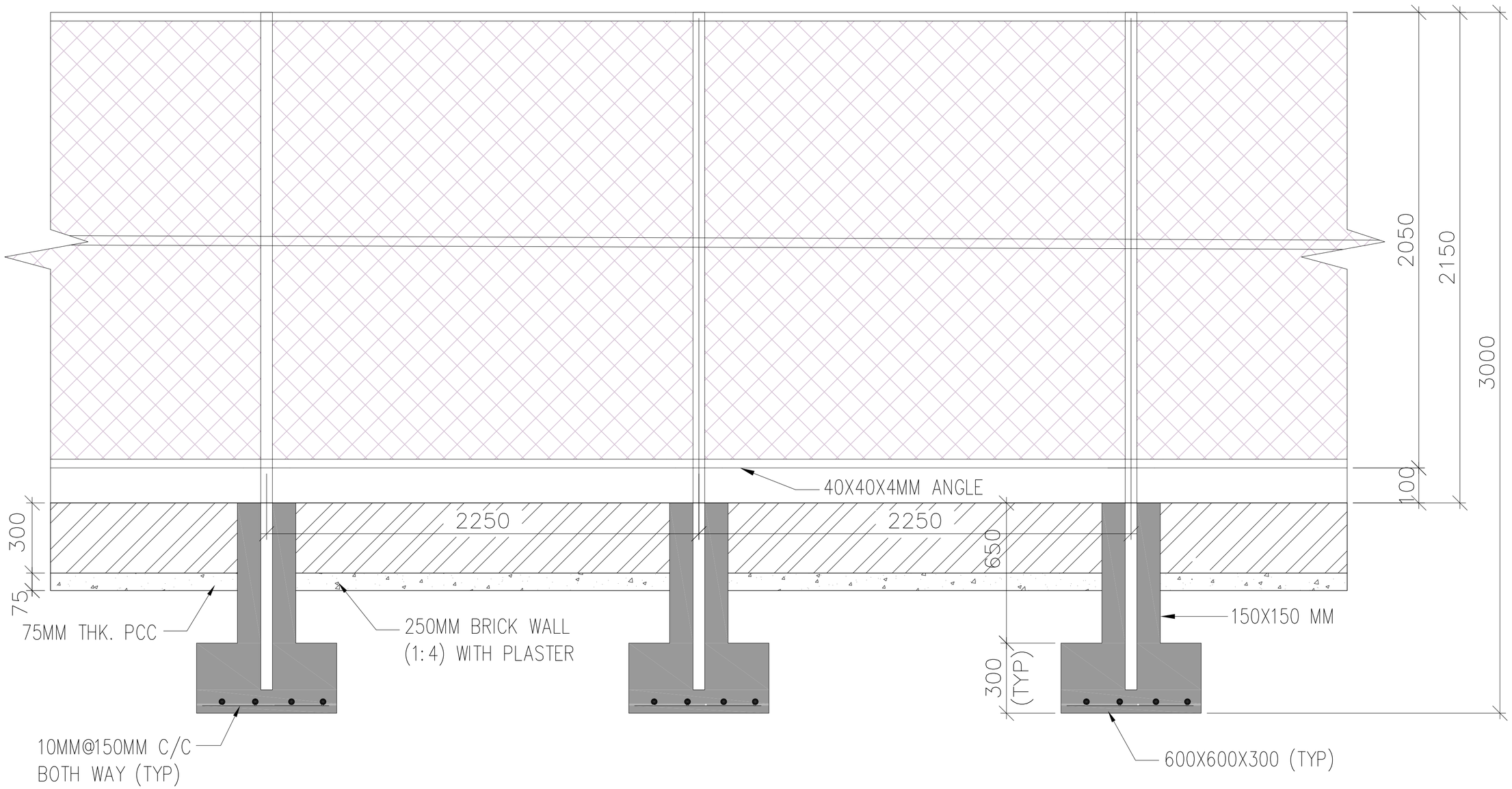

CHAIN LINK

COPY RIGHT AND CONFIDENTIAL
The information is the property of BHARAT HEAVY ELECTRICALS LIMITED
it must not be used directly or indirectly to the detriment of the company.

REV	DESCRIPTION	DESN	DRN	CHD	APPD

CONSULTANT:

CLIENT:

PROJECT: STANDARDIZATION OF PROJECT INFRASTRUCTURE FACILITIES

CONTRACTOR
BHARAT HEAVY ELECTRICALS LTD
POWER SECTOR

TITLE: CHAIN LINK

SCALE

DRAWING NO.

RELEASED FOR: ☐ PRELIMINARY ☐ TENDER ☐ INFORMATION ☐ APPROVAL ☐ CONSTRUCTION

	NAME	DATE
DRN		
DESN		
CHD		
APPD		

SHEET OF REV.

PROJECTION

FORMAT SIZE A0

FIRST ANGLE PROJECTION

ALL DIMENSIONS ARE IN MM

DRAWING NO.

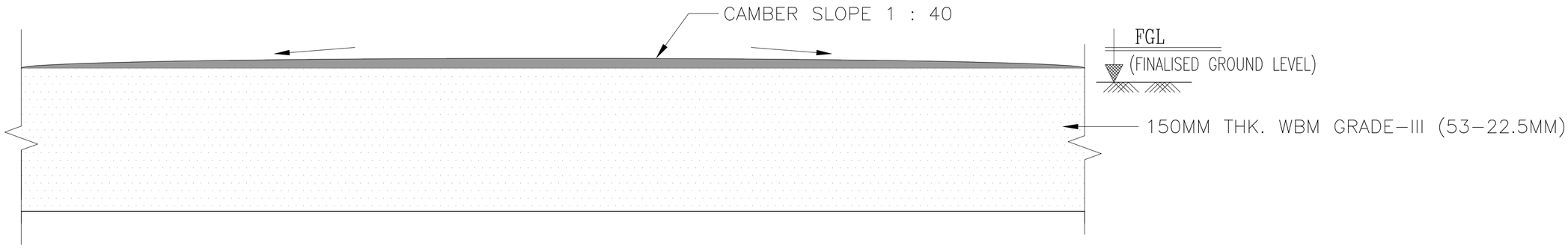

CONCRETE RAISED PLATFORM

NOTES:

1. FLY ASH MIX WITH CEMENT. (90% FLY ASH WITH 10% CEMENT)
2. ROLLER COMPACTED CONCRETE WITH ABOVE SPECIFICATION SHALL BE USED FOR CONCRETE RAISED PLATFORM.

COPY RIGHT AND CONFIDENTIAL
The information in this document is the property of BHARAT HEAVY ELECTRICALS LIMITED
it must not be used directly or indirectly in any way detrimental to the interest of the company.

REV	DESCRIPTION	DESN	DRN	CHD	APPD

CONSULTANT:

CLIENT:

PROJECT: STANDARDIZATION OF PROJECT INFRASTRUCTURE FACILITIES

CONTRACTOR
BHARAT HEAVY ELECTRICALS LTD
POWER SECTOR

TITLE: CONCRETE RAISED PLATFORM

SCALE:

DRAWING NO.

RELEASED FOR: ☐ PRELIMINARY ☐ TENDER ☐ INFORMATION ☐ APPROVAL ☐ CONSTRUCTION

	NAME	DATE
DRN		
DESN		
CHD		
APPD		

SHEET OF REV.

PROJECTION

FORMAT SIZE A0

FIRST ANGLE PROJECTION

ALL DIMENSIONS ARE IN MM

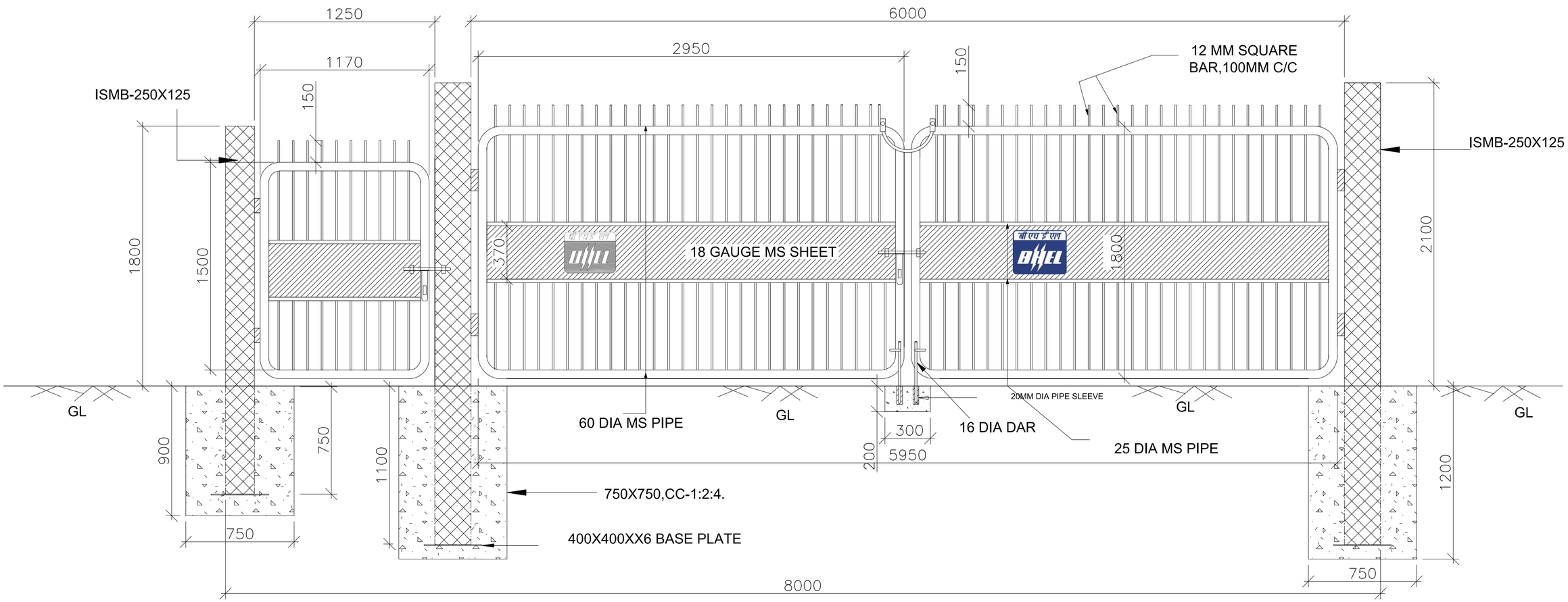

GATE

COPY RIGHT AND CONFIDENTIAL
The information on this document is the property of BHARAT HEAVY ELECTRICALS LIMITED
it must not be used directly or indirectly to the detriment of the company.

REV	DESCRIPTION	DESN	DRN	CHD	APPD

CONSULTANT:

CLIENT:

PROJECT: STANDARDIZATION OF PROJECT INFRASTRUCTURE FACILITIES

CONTRACTOR

BHARAT HEAVY ELECTRICALS LTD
POWER SECTOR

TITLE: GATE

SCALE

DRAWING NO.

RELEASED FOR: ☐ PRELIMINARY ☐ TENDER ☐ INFORMATION ☐ APPROVAL ☐ CONSTRUCTION

	NAME	DATE
DRN		
DESN		
CHD		
APPD		

SHEET OF REV.

PROJECTION

FORMAT SIZE A0

FIRST ANGLE PROJECTION

ALL DIMENSIONS ARE IN MM

DRAWING NO.

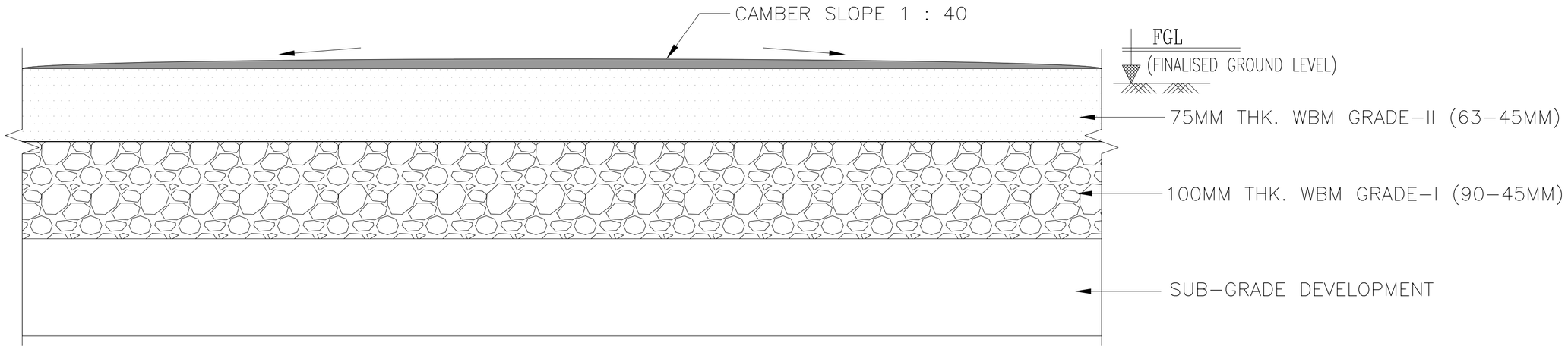

HARD SURFACE

COPY RIGHT AND CONFIDENTIAL
The information in this document is the property of BHARAT HEAVY ELECTRICALS LIMITED
it must not be used directly or indirectly to the detriment of the company.

REV	DESCRIPTION	DESN	DRN	CHD	APPD

CONSULTANT:

CLIENT:

PROJECT: STANDARDIZATION OF PROJECT INFRASTRUCTURE FACILITIES

CONTRACTOR

BHARAT HEAVY ELECTRICALS LTD
POWER SECTOR

TITLE: HARD SURFACE

SCALE

DRAWING NO.

RELEASED FOR: ☐ PRELIMINARY ☐ TENDER ☐ INFORMATION ☐ APPROVAL ☐ CONSTRUCTION

	NAME	DATE
DRN		
DESN		
CHD		
APPD		
SHEET OF		REV.

PROJECTION

FORMAT SIZE A0

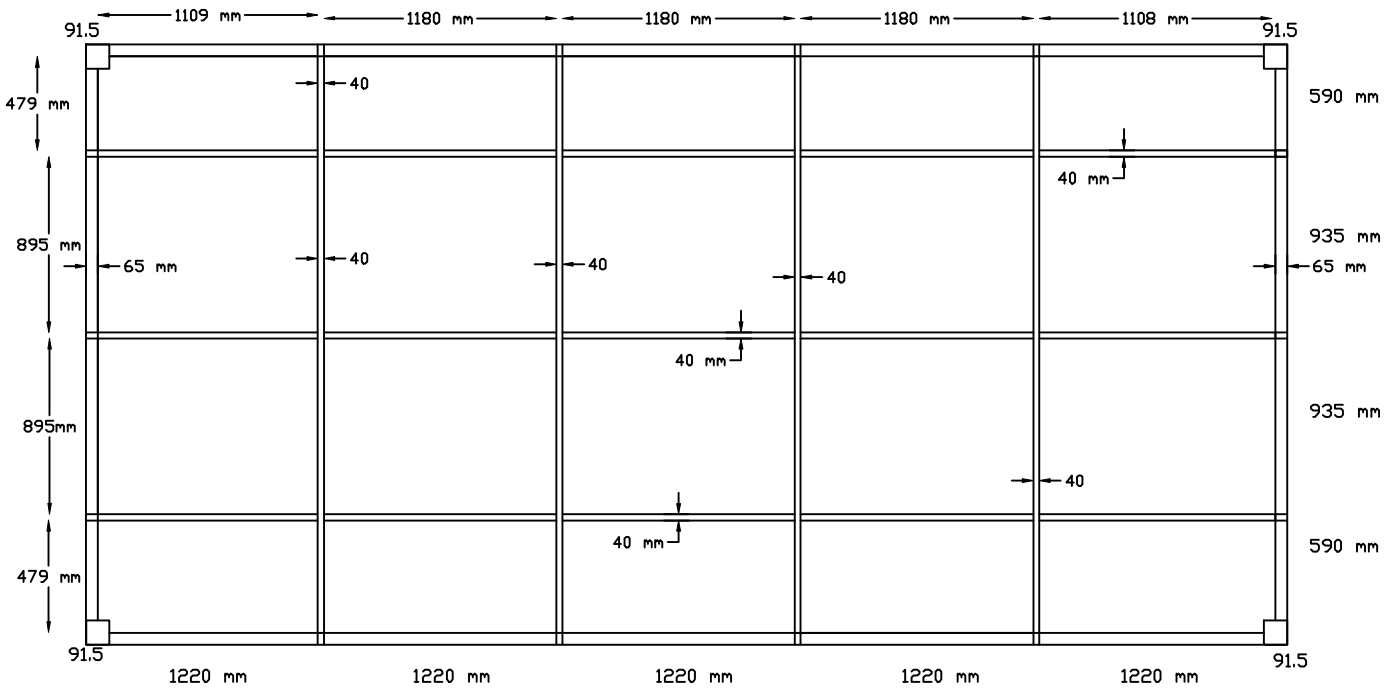

Plan of MS Base frame (size 20' x 10' x 8.5')

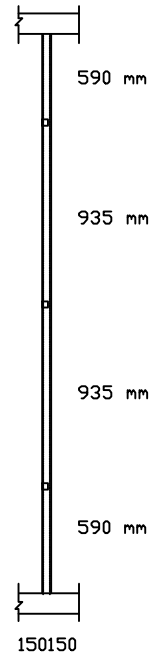

SIDE VIEW

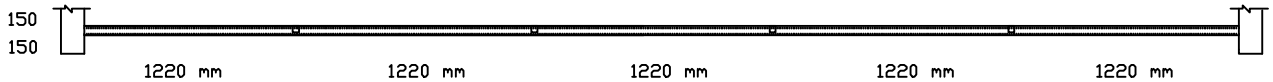

ELEVATION

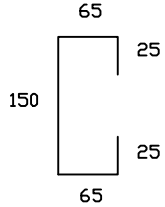

C SECTION DETAILS

Material of MS Base frame (150mm x 65mm x 2.5mm thick) & RHS (Rolled Hollow Section) --- 80mm x 40mmx 2.5mm thick

Drawing Title - MS Base frame Size - 20' x 10' x 8.5'

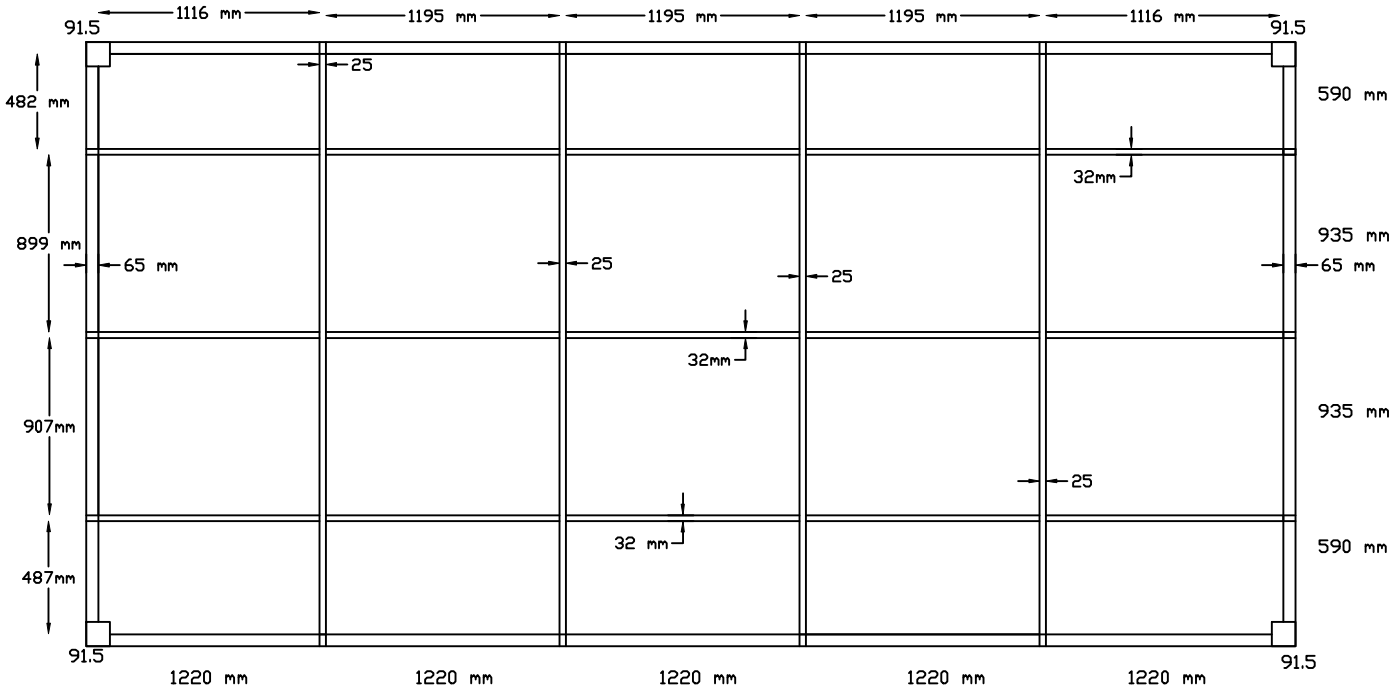

Plan of MS Top frame (size 20' x 10' x 8.5')

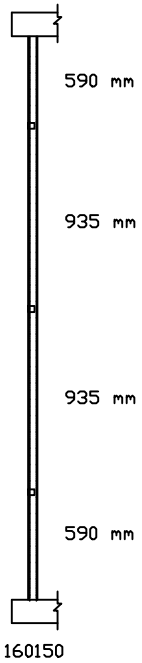

SIDE VIEW

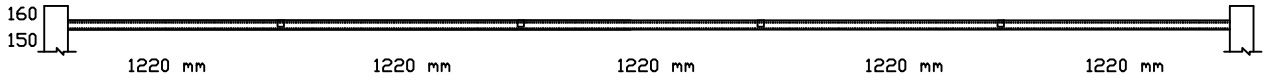

ELEVATION

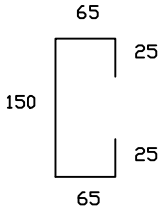

C SECTION DETAILS

Material of MS Top frame (150mm x 65mm x 2.5mm thick) & RHS (Rolled Hollow Section) --- 50mm x 25mmx 2.5mm thick
SHS (Square Hollow section) --- 32mm x 32mm x 2.0mm thick

Drawing Title - MS Top frame Size - 20' x 10' x 8.5'

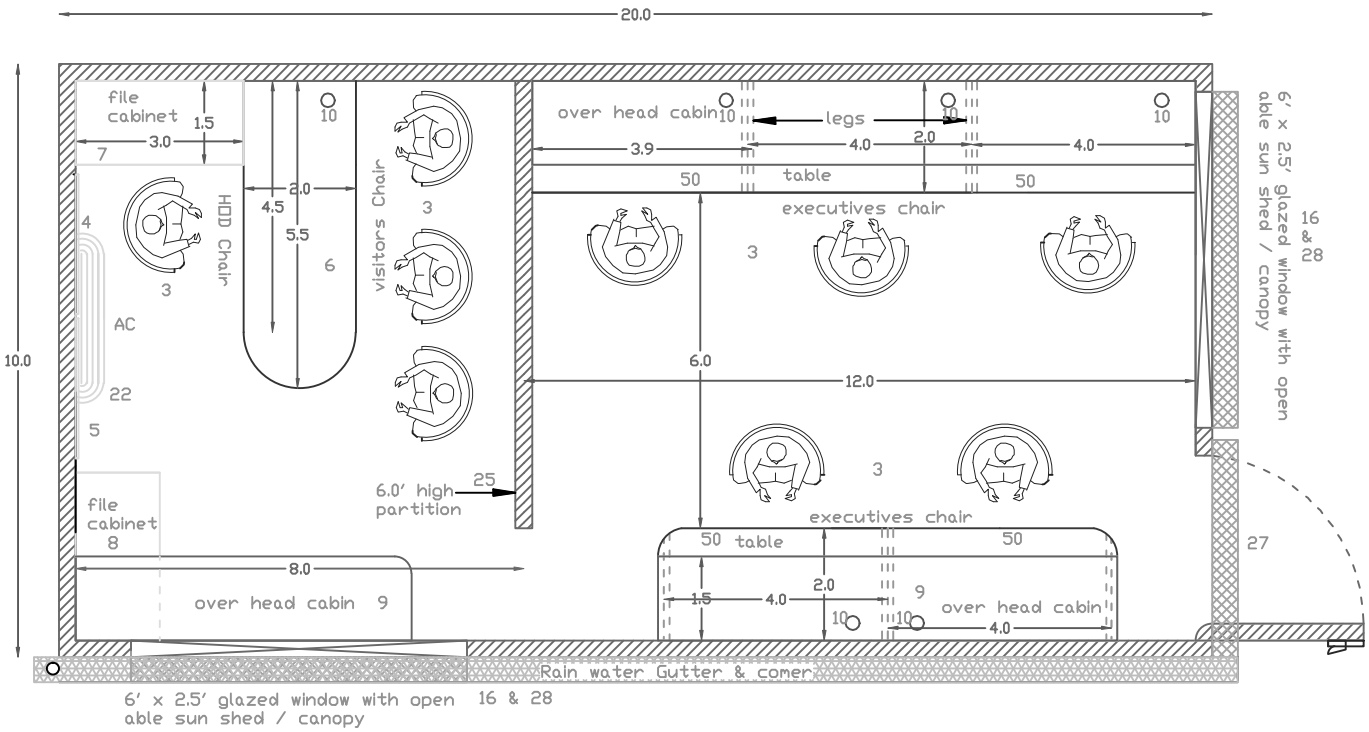

EXECUTIVE INCHARGE / HOD - 20' X 10 ' X 8.0 ' - B TYPE BUNK HOUSE.

Code No	Materials Lists / Specifications	Qty
3	EX. chair serena model 19002 A Godreg make	6
	Visitor chair regency model PCH 7003D Godreg make	3
4	White board Size:750x1000mm	1
6	HOD Table Size:1676x600x750mm ht.	1
7	File cabinet Size:914x450x750mm ht.	1
8	File cabinet Size:914x450x1500mm ht.	1
9	Over Head Cabinet Size:450x600mm .	3
10	Opening for cable	6
16	PVC Sliding window Size:1829x900mm	2
22	Split A.C.	1
25	Half Partition 6' Height	1
27	Door Size:900x1970mm	1
28	Canopy (Foldable) at door / Window size as per Drawing	
50	Running Table of Size : 2 ' width x length as per drawing	
5	Perforated board Size:750x1000mm	1

Note :
1) All dimensions in the Drawing are in Feet & Inches unless otherwise mentioned.
2) Clear Height between finished floor level to bottom of ceiling is 8.00'.
3) Condenser unit for split AC shall be located outside of Bunk house .
4) Position of cable opening as per the switch board location.

Title: Executive in charge / HOD cabin

Type : E

Size : 20' x 10 '

Clint : BHEL - PSWR

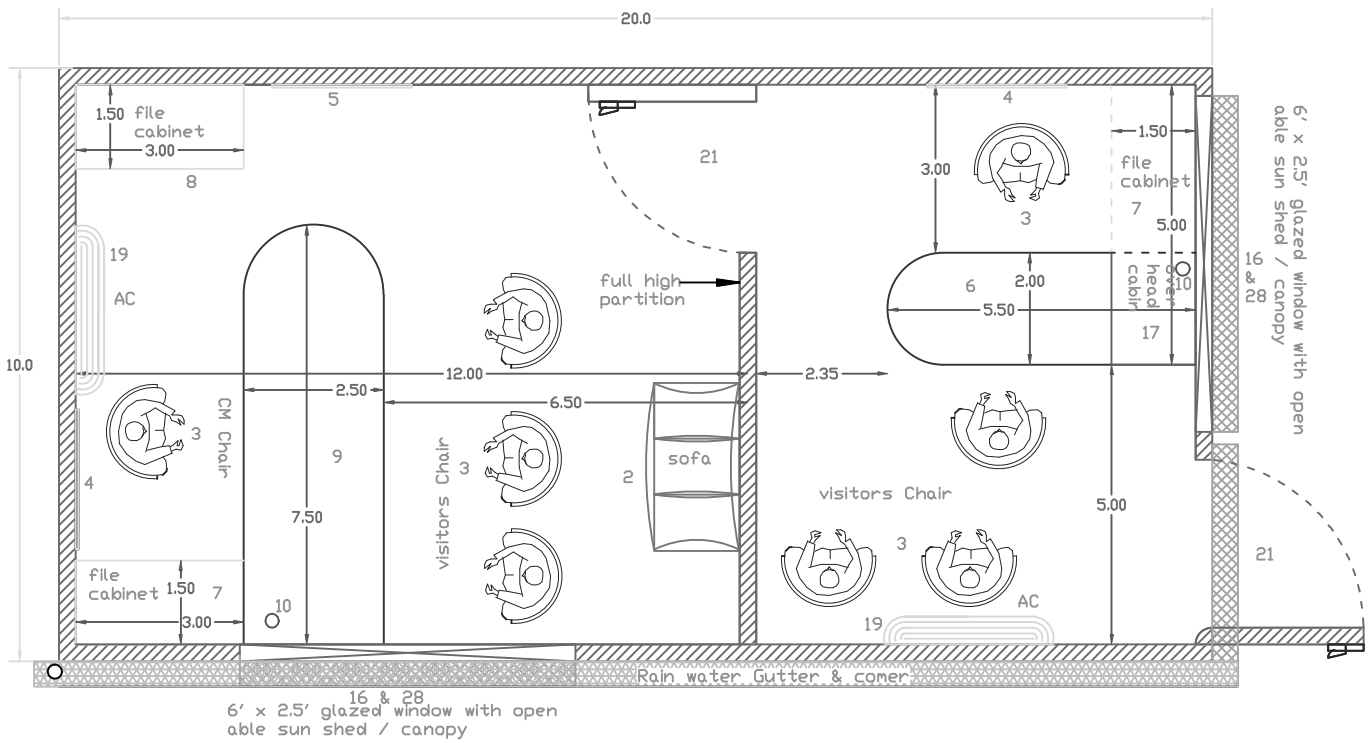

CONSTRUCTION MANAGER CMC CABIN - 20' X 10' - A TYPE BUNK HOUSE.

Code No.	Materials Lists / Specifications	Qty
2	Sofa petal series F3XX 3seater Godreg make Model No.	1
3	CM chair regency model ECH 7001D Godreg make Model No.	1
	PS chair serena model 19002 A Godreg make Model No.	1
	Visitor chair regency model PCH 7003D Godreg make Model No.	6
4	White board Size:750x1000mm	2
5	Perforated board Size:750x1000mm	1
6	PS Table Size:1829x600x750mm ht.	1
7	File cabinet Size:914x450x750mm ht.	2
8	File cabinet Size:914x450x1500mm ht.	1
9	CM Table Size:2286x750x750mm ht.	1
16	PVC Sliding Glazed window Size:1829x750mm	2
18	Over Head Cabinate with 2 track sliding shutter size: 450x450mm	1
19	Split A.C.	2
20	Full Partition (up to ceiling)	1
21	Door Size:900x1970mm	2
23	Opening for cable	2
28	Canopy (Foldable) at door / Window size as per Drawing	
10	Opening for cable	2

Note :
1) All dimensions in the Drawing are in Feet & Inches unless otherwise mentioned.
2) Clear Height between finished floor level to bottom of ceiling is 8.00'.
3) Condenser unit for split AC shall be located outside of Bunk house .
4) Position of cable opening as per the switch board location.

Title: Construction Manager cabin

Type : A

Size : 20' x 10 '

Clint : BHEL - PSWR

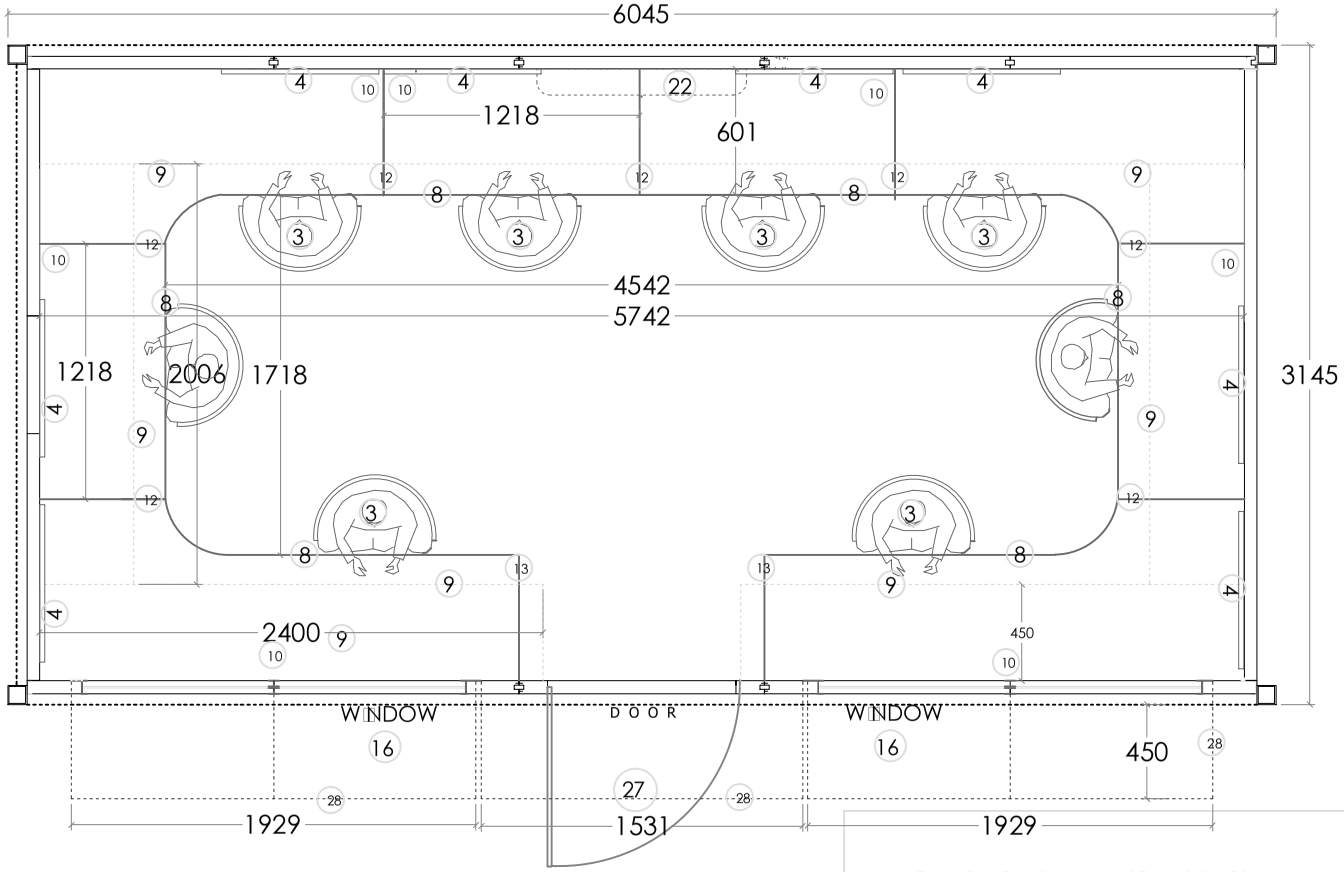

3	Visitor/Staff chair regency model PCH 7003D Godre□make.	8
4	White board Size:750x1000mm	8
8	Running Table Size:as per Drawing.	2
9	Over Head Cabinate Size:As per Drawing.	
10	Opening for cable	8
12	Table partition wall 450mm height from top table surface	7
13	Partition wall up to bottom of Over head cabinate	2
16	PVC Sliding Glazed window Size:1829x750mm	2
22	Split A.C.	1
27	Door Size:900x1970mm	1
28	Canopy (Foldable) at door / Window size as per Drawing	

Note:
1) All Notes shall be followed as per other drawings

Field Cabin /Staff **Size: 20'x10'----** **Type: C**

BHEL PSWR

FIRST ANGLE PROJECTION

ALL DIMENSIONS ARE IN MM

DRAWING NO.

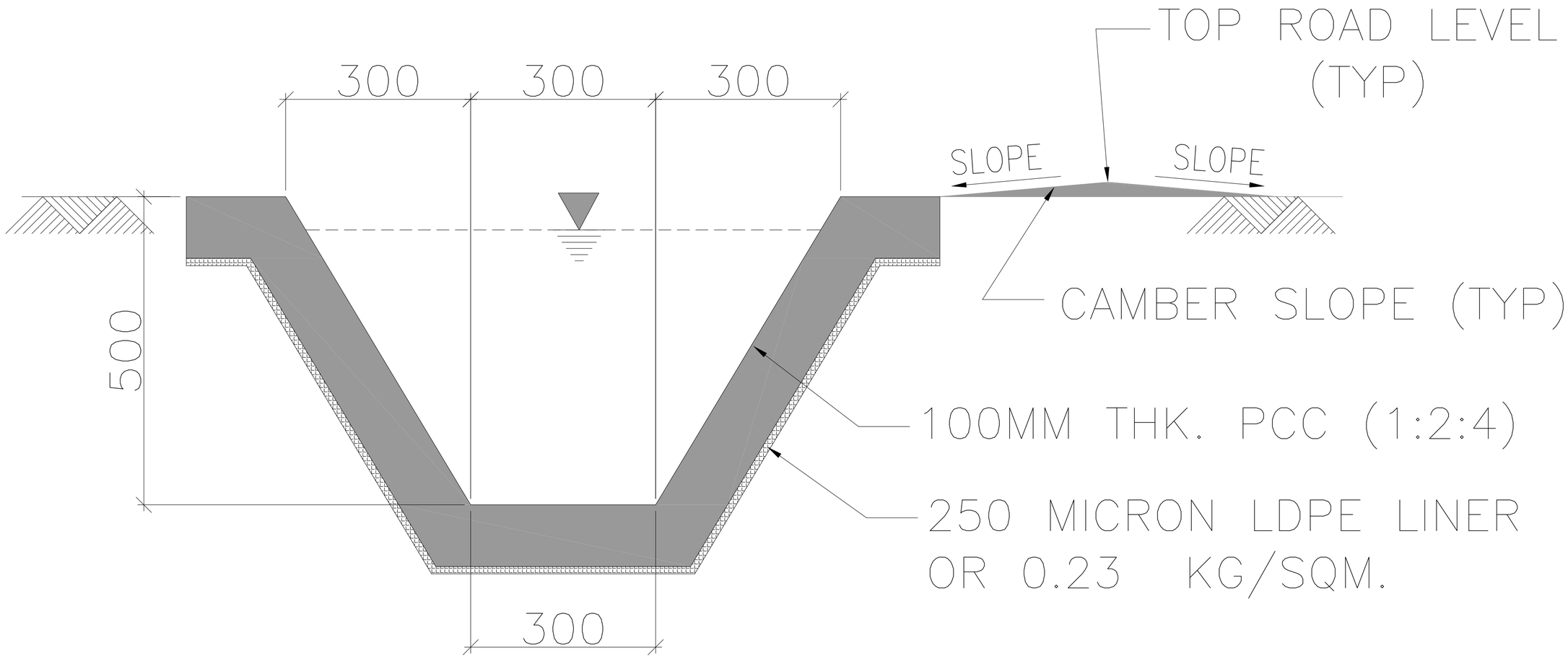

NOTE : CONSTRUCTION JOINT WILL BE GIVEN AFTER EVERY 30M.

COPY RIGHT AND CONFIDENTIAL
The information in this document is the property of BHARAT HEAVY ELECTRICALS LIMITED
it must not be used directly or indirectly in any way detrimental to the interest of the company.

REV	DESCRIPTION	DESN	DRN	CHD	APPD

CONSULTANT:

CLIENT:

PROJECT: STANDARDIZATION OF PROJECT INFRASTRUCTURE FACILITIES

CONTRACTOR

BHARAT HEAVY ELECTRICALS LTD
POWER SECTOR

TITLE: TRAPEZOIDAL DRAIN : SECTION

SCALE

DRAWING NO.

RELEASED FOR: ☐ PRELIMINARY ☐ TENDER ☐ INFORMATION ☐ APPROVAL ☐ CONSTRUCTION

	NAME	DATE
DRN.		
DESN.		
CHD		
APPD		

SHEET OF REV.

PROJECTION

FIRST ANGLE PROJECTION

ALL DIMENSIONS ARE IN MM

DRAWING NO.

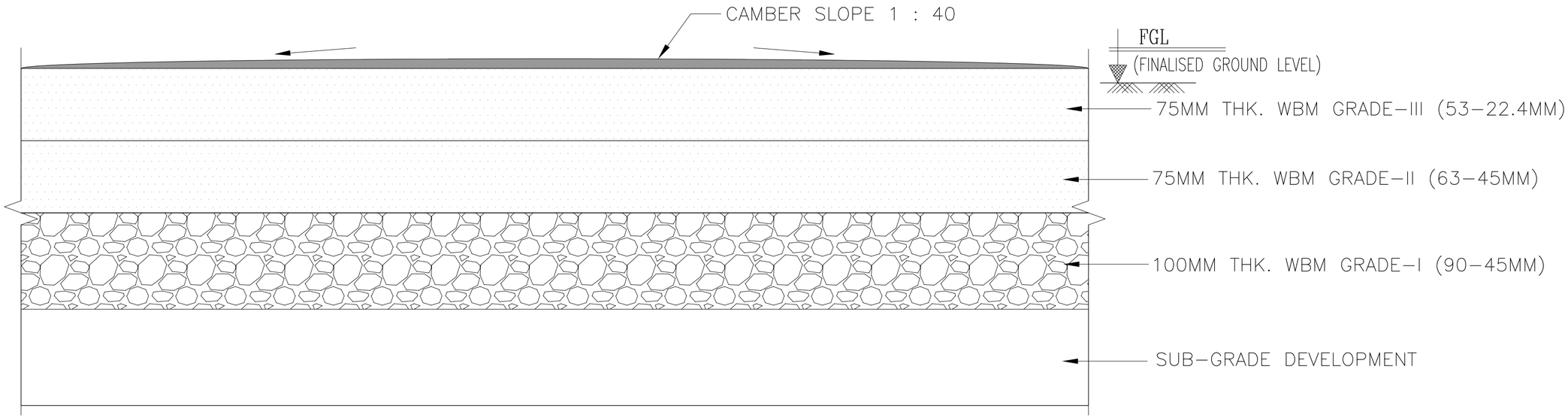

WBM APPROACH ROAD

COPY RIGHT AND CONFIDENTIAL
The information in this document is the property of BHARAT HEAVY ELECTRICALS LIMITED
it must not be used directly or indirectly to the detriment of the company.

REV	DESCRIPTION	DESN	DRN	CHD	APPD

CONSULTANT:

CLIENT:

PROJECT: STANDARDIZATION OF PROJECT INFRASTRUCTURE FACILITIES

CONTRACTOR

BHARAT HEAVY ELECTRICALS LTD
POWER SECTOR

TITLE: WBM APPROACH ROAD

SCALE

DRAWING NO.

RELEASED FOR: ☐ PRELIMINARY ☐ TENDER ☐ INFORMATION ☐ APPROVAL ☐ CONSTRUCTION

	NAME	DATE
DRN		
DESN		
CHD		
APPD		
SHEET OF		REV.

PROJECTION

FORMAT SIZE A0